Differential

Disassembly

1. Hold the differential in a bench vise using a special tool, then remove the differential housing mounting bolts in a crisscross pattern in several steps.

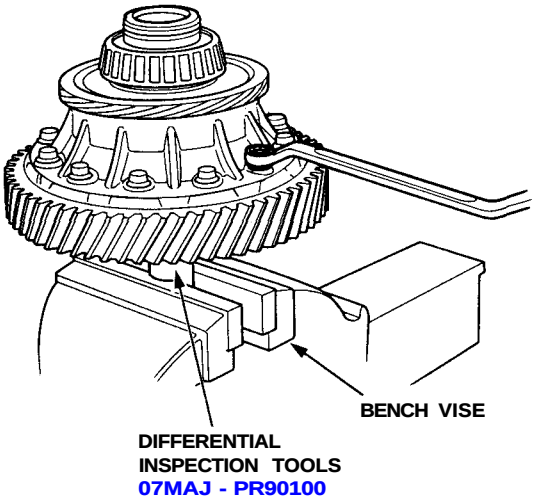

2. Remove the differential housing, then install the special tools on the stop plate.

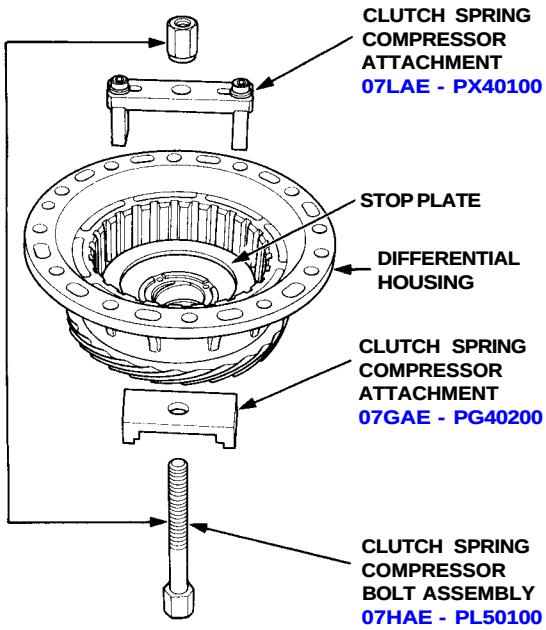

3. Compress the spring plate.

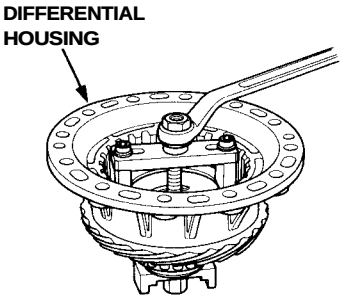

4. Remove the stop clip.

5. Remove the special tools, and then remove the stop plate, spring plate, and 60 mm washer.

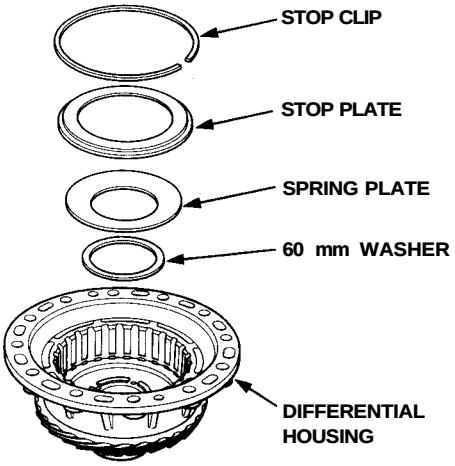

cardiagn.com

6. Remove the 112 mm thrust shim, clutch discs, clutch plates, and 102 mm washer.

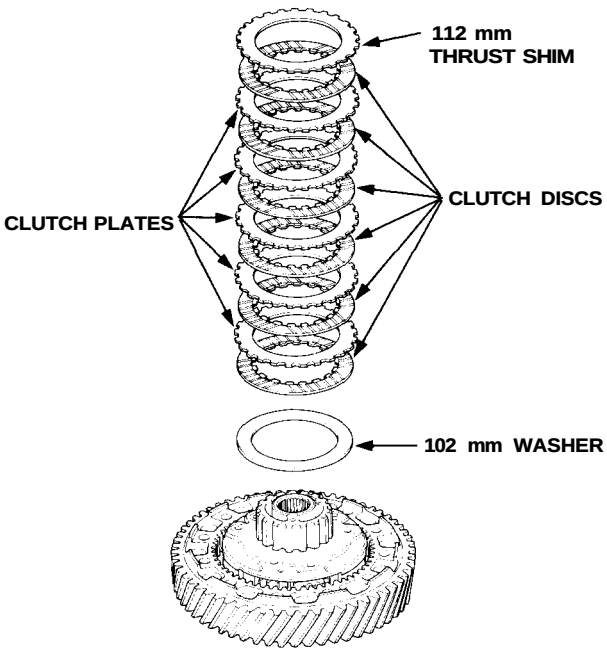

7. Remove the carrier assembly, central gear, clutch plate, and clutch disc.

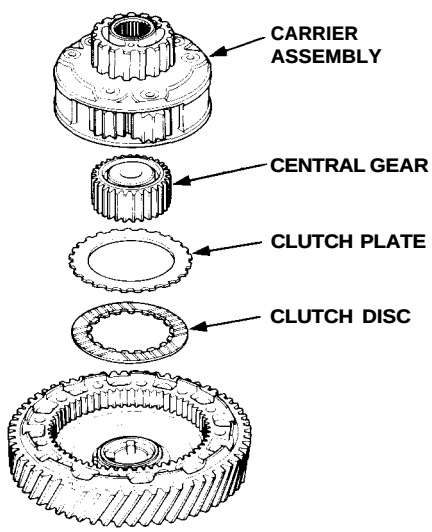

8. Screw two 8 x 1.0 mm bolts into the threaded holes in the differential housing cover to push it away from the final driven gear. Turn each bolt two turns at a time to prevent cocking the differential housing coverexcessively.

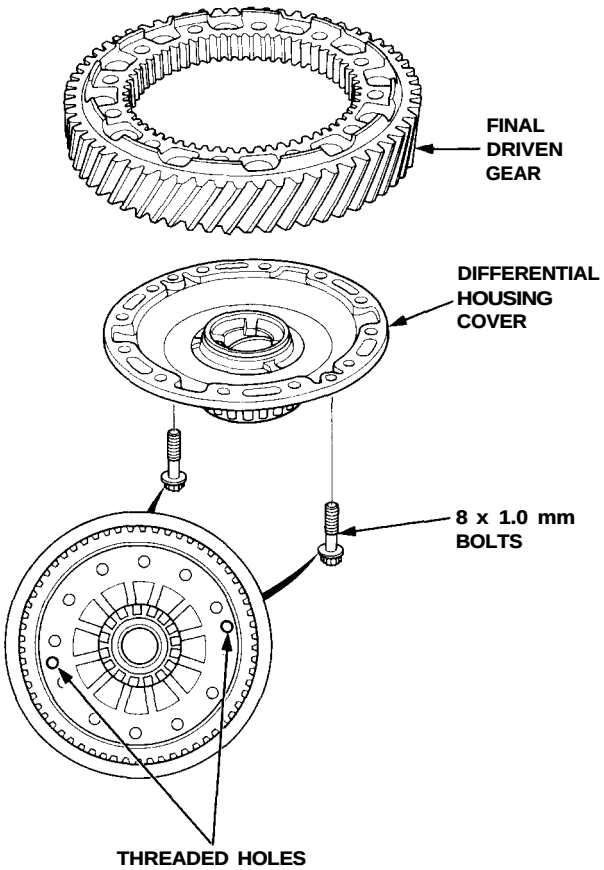

cardiagn.com